සියලු ම හිමිකම් ඇවිරිණි / முழுப் பதிப்புரிமையுடையது / All Rights Reserved]

ශ්‍රී ලංකා විභාග දෙපාර්තමේන්තුව
இலங்கைப் பரீடசைத் திணைக்களம்
Department of Examinations, Sri Lanka

අධ්‍යයන පොදු සහතික පත්‍ර (උසස් පෙළ) විභාගය, 2017 අගෝස්තු
கல்விப் பொதுத் தராதரப் பத்திர (உயர் தர)ப் பரீடசை, 2017 ஓகஸ்ற்
General Certificate of Education (Adv. Level) Examination, August 2017

තොරතුරු හා සන්නිවේදන තාක්ෂණය I
தகவல், தொடர்பாடல் தொழினுட்பவியல் I
Information & Communication Technology I

20 E I

පැය දෙකයි
இரண்டு மணித்தியாலம்
Two hours

Instructions:

- *Answer **all** the questions.*
- *Write your **Index Number** in the space provided in the answer sheet.*
- *Instructions are also given on the back of the answer sheet. Follow those carefully.*
- *In each of the questions **1** to **50,** pick one of the alternatives from* (1), (2), (3), (4), (5) *which is **correct or most appropriate** and **mark your response on the answer sheet with a cross** (x) **in accordance with the instructions given on the back of the answer sheet.***
- *Use of calculators is **not allowed.***

1. Who proposed the stored program concept first?
(1) Lady Ada Augusta (2) Charles Babbage (3) Howard Aiken
(4) Blaise Pascal (5) Von Neumann

2. Which of the following components is generally seen outside the Central Processing Unit (CPU) of a computer?
(1) RAM (2) Control Unit (3) ALU
(4) General purpose registers (5) L1 cache memory

3. What is the two's complement representation of 45, if an integer is represented by 8 bits?
(1) 11010011 (2) 10110011 (3) 11001101 (4) 00101111 (5) 00101101

4. Which of the followings is another name for web publishing?
(1) Offline publishing (2) Desktop publishing (3) Media publishing
(4) Online publishing (5) Self publishing

5. Which of the following secondary storage devices is generally considered to provide the fastest access to data?
(1) Compact Disc (2) Digital Versatile Disc (3) Internal hard disk
(4) Magnetic tape (5) Floppy disk

6. Which of the followings is usually used to boot-up personal computers?
(1) Firmware (2) Malware (3) Adware (4) Ransomware (5) Liveware

7. Which of the followings is a main use of Complementary Metal-Oxide Semiconductor (CMOS) memory of a personal computer?
(1) Keeping inputs for processing (2) Holding instructions for operations
(3) Providing space for loading operating system (4) Retaining information for output
(5) Keeping Basic Input Output System settings for the booting procedure

8. The execution of a series of non-interactive jobs on a personal computer with relative to the user is known as
(1) multitasking. (2) multiuser processing. (3) multiprocessing.
(4) batch processing. (5) online processing.

9. Which of the following numbers is equivalent to the binary number 101111_2?
(1) 57_8 (2) 57_{16} (3) 57_{10} (4) 59_{16} (5) $5F_{16}$

10. $5D_{16} + 10111_2 =$
(1) 73_8 (2) 75_{16} (3) 116_8 (4) 163_8 (5) 164_8

11. What is the binary representation of 9.25_{10}?
(1) 1110011101 (2) 00001001.01 (3) 0000100101 (4) 1000100101 (5) 10001001.01

[See page two

12. A ..... on motherboard is used to expand the functionality of a computer.
Which of the followings is the most appropriate to fill in the blank in the above statement?
(1) Bus (2) Clock (3) RAM (4) Slot (5) ROM

13. Consider the following HTML code:

```
<html>
  <head>
        <title>Countries</title>
  </head>
  <body>
        <p><!-- <h1> Sri Lanka </h1> --></p>
  </body>
</html>
```

Which of the followings correctly describes the display, when the above code is rendered?
(1) The text "Country" appears on the title bar and the text "Sri Lanka" appears as a header.
(2) The text "Sri Lanka" appears on the title bar and the text "Country" appears as a header.
(3) The text "Country" appears on the title bar.
(4) The text "<!--<hl> Sri Lanka </h1>-->" appears on the title bar.
(5) The text "<!--<hl> Sri Lanka </h1>-->" appears in the body of the web page.

14. Consider the "Submit" button of an HTML form given below:

Submit

Which of the following tags/elements correctly implements the intended function of the above "Submit" button?
(1) <input type = "submit" value = "Submit">
(2) <input type = "button" value = "Submit'>
(3) <button type = "button" >Submit</ button>
(4) <button type = "submit"></ button>
(5) <button type = "submit" value = "Submit"></ button>

15. Which of the following CSS rules renders the image in the file "school.png" as the background of a web page?
(1) body { background = "school.png"; }
(2) body { background: url ("school.png"): }
(3) body { background-image = "school.png"; }
(4) body { background-image: "school.png"; }
(5) body { background-image: url ("school.png"); }

16. In electronic mail systems, the protocol used by mail clients to retrieve messages from the mail server is
(1) Simple Mail Transfer Protocol (SMTP). (2) File Transfer Protocol (FTP).
(3) Internet Control Message Protocol (ICMP). (4) Internet Message Access Protocol (IMAP).
(5) Telnet.

17. The transport layer protocol User Datagram Protocol (UDP) can be used for
(1) reliable communication (2) guaranteed delivery
(3) connection oriented communication. (4) ordered delivery
(5) exchanging state information among routers.

18. Which of the following statements regarding MAC addresses is correct?
(1) Every network device has a unique MAC address.
(2) Every network host has a unique MAC address.
(3) Every network interface has a unique MAC address.
(4) It is assigned for a device at the time of installation.
(5) It is used for routing.

19. The first and the last IP addresses of a subnet are 192.192.48.0 and 192.192.63.255 respectively. Which of the followings is the subnet mask of this subnet?
(1) 255.255.255.0 (2) 255.255.192.0 (3) 255.255.255.192
(4) 255.255.240.0 (5) 255.240.0.0

[*See page three*

20. 172.16.48.200/24 is a
(1) host address in a class B network.
(2) network address of a class C network.
(3) host address in 172.16.48.0/24 subnet.
(4) network address of a subnet with 255 hosts.
(5) host address with 8 network bits.

21. In TCP/IP computer networks, Transport Protocol Data Unit (TPDU) is referred to as a
(1) packet. (2) frame. (3) segment (4) window. (5) message.

22. Which of the following statements best describes a nice to have non-functional requirement of an Automated Teller Machine (ATM)?
(1) System shall facilitate users to withdraw money.
(2) System should let users to deposit money.
(3) System shall use 256-bit encryption for all communications.
(4) System should provide users a touch screen interface.
(5) System shall dispense money within 5 seconds.

23. The following symbol, appeared in a Data Flow Diagram (DFD) of a Sales Information System, represents a ..... containing payment details.

T1(M)	Payment

Which of the followings is most appropriate to fill in the blank in the above statement?
(1) file tray
(2) cardboard file
(3) file cabinet
(4) data file in a hard disk
(5) temporary data file in a hard disk

24. Which of the following dataflow diagrams is correct with respect to the rules of dataflow modelling?

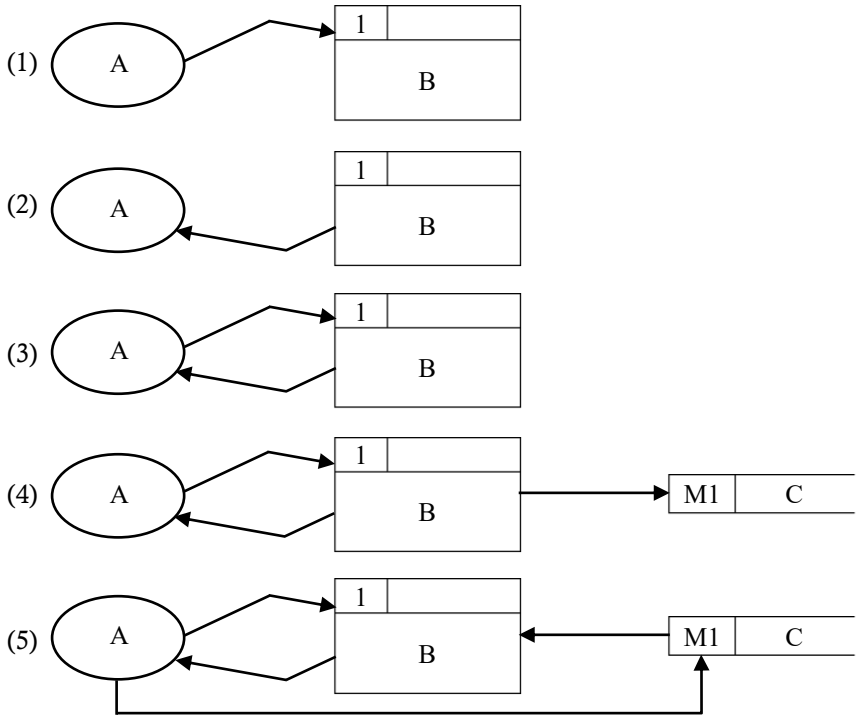

[See page four

25. Consider the following flow chart:

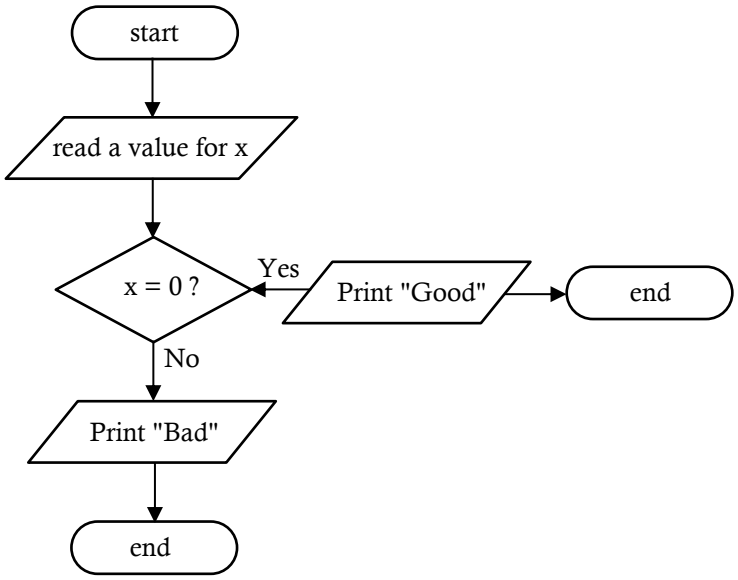

What is the error with the above flow chart?
(1) It has two end symbols.
(2) Print is not a valid keyword.
(3) It has no process box.
(4) It has two print symbols.
(5) A flow direction is not correct.

26. Which of the following statements is true about e-business?
(1) It is a business process which conducts partially on online.
(2) It consists of front-end and back-end online processes.
(3) All 'brick vendors' conduct their business on online.
(4) Any e-commerce application is an e-business application.
(5) Any e-business application is an e-commerce application.

27. Students in a school are given tablet computers to improve their studies. Which of the followings is the most appropriate activity to achieve this objective?
(1) Downloading computerized study material
(2) Watching entertainment videos
(3) Instant messaging among friends
(4) Blog writing
(5) Playing computer games

28. Which of the following statements is true about Artificial Intelligence?
(1) Inference Engine in an Expert System completely mimics human decision making process.
(2) Knowledge Base in an Expert System consists only the primary knowledge of an expert.
(3) Expert systems are always implemented by using Genetic Algorithms.
(4) Genetic Algorithms provide only one solution to a given problem.
(5) Genetic Algorithm evolves a solution for a given problem over a number of iterations.

29. Which of the following statements is true about algorithms?
(1) A set of steps used to solve a problem is called an algorithm.
(2) A sequence of activities used to solve a problem is called an algorithm.
(3) To solve any problem, there can be at most one algorithm.
(4) An algorithm can contain an infinite number of steps.
(5) An algorithm does not need to terminate within a finite time.

30. Requirements of a system can be classified as Mandatory (Essential), Desirable (Optional), Functional and Non-functional.
"ATM of a bank shall not allow more than three attempts to enter a user's secret number incorrectly"
Which of the followings correctly classifies the above requirement?
(1) Mandatory, Functional
(2) Mandatory, Non-functional
(3) Desirable, Functional
(4) Desirable, Non-functional
(5) Mandatory or Desirable, Functional

[*See page five*

- Consider the following relation to answer questions **31** and **32**:

  Student (index_no, national_id_no, name, date_of_birth, gender, blood_group)
  where index_no is a unique attribute and the name attribute fully depends on the index_no attribute.

31. Which of the following statements is correct with respect to the normal form of the above relation?
(1) It is in the zero normal form.
(2) It is in the first normal form.
(3) It is in the second normal form.
(4) It is in the third normal form.
(5) Its normal form cannot be decided.

32. Which of the followings can be a candidate key of the above relation?
(1) national_id_no (2) name (3) date_of_birth (4) gender (5) blood_group

- Consider the following relation to answer questions **33** and **36**:

  book (book_no, title, publisher, edition)
  author (author_id, name, email_address)
  bookAuthor (book_no, author_id)
  where book_no and author_id are unique attributes in the relations book and author respectively.

33. Which of the following statements is correct with respect to the relation bookAuthor?
(1) book_no is the primary key.
(2) author_id is the primary key.
(3) Any single attribute can be a candidate key.
(4) author_id is a candidate key.
(5) book_no is a part of the primary key.

34. Which of the following Entity Relationship (ER) diagrams correctly represents the relationship between the entities represented by the above relations?

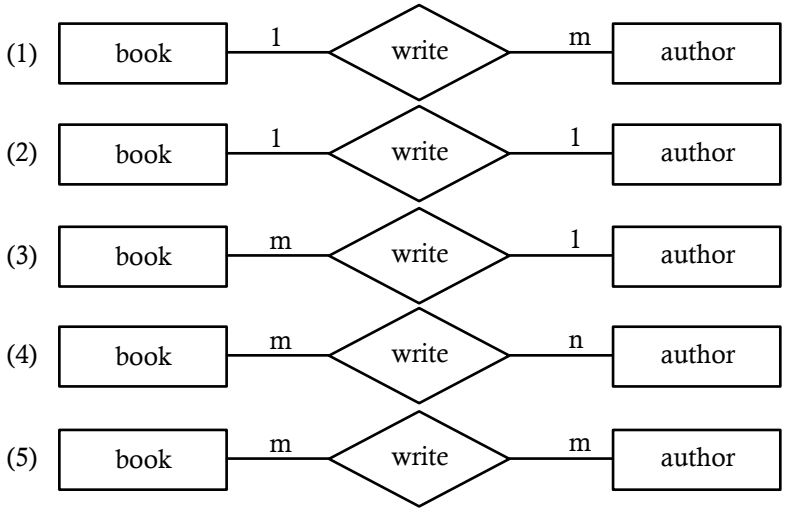

35. Assume that above relations are converted into tables in a relational database. The following SQL query is executed on the database:

SELECT * FROM bookAuthor

Which of the following statements is correct regarding the output of the above SQL query?
(1) It cannot be an empty table.
(2) title column is in it.
(3) name column is in it.
(4) All the tables book, author and bookAuthor are used to produce the output.
(5) All records in the bookAuthor table are in the output.

36. Consider the following statements regarding the Data Definition Language (DDL) used to create the table bookAuthor while maintaining data integrity:
A - It has a primary key constraint.
B - It has a foreign key constraint.
C - It has a domain constraint.
Which of the above statement/s is/are correct?
(1) A only
(2) A and B only
(3) A and C only
(4) B and C only
(5) All A, B and C

[*See page six*

37. Which of the following organs is a part of a closed system of the human body?
(1) Eye (2) Ear (3) Heart (4) Kidney (5) Lung

38. Which of the following statements is correct?
(1) Application software load applications into the main memory.
(2) The programs stored in ROM are known as system software.
(3) System software support data communication between peripheral devices.
(4) Utility software is generally stored in ROM.
(5) Utility software are incorporated in washing machines.

39. Consider the following data input devices:
A - On screen keyboard (virtual keyboard)
B - Bar code reader
C - Magnetic card reader
Which of the above devices can be used to input data more efficiently?
(1) A only (2) B only (3) C only (4) A and B only (5) B and C only

40. Consider the following statements regarding CSS used in HTML:
A - One style sheet can define the rendering of HTML elements in multiple documents.
B - No additional download is needed to import style sheets.
C - The HTML document must include a <link> tag.
D - The style attribute is required in the relevant element.
Which of the above statements are correct when using External Style Sheets?
(1) A and B only (2) A and C only (3) B and D only
(4) A, C and D only (5) B, C and D only

41. Which of the following statements about Python data types/expressions is correct?
(1) String is a mutable data type.
(2) List is an immutable data type.
(3) [1, 2, 3] is a tuple.
(4) The expression [1, 2, 3] [1] will produce [2] when executed.
(5) The type of {'a':1, 1:(1, 2)} is a Dictionary.

42. Consider the following values:
A - 2.3e2
B - TRUE
C - "This isn't a string"
D - "
Which of the above values are valid in Python?
(1) A and B only (2) A and C only (3) B and C only
(4) A, B and C only (5) A, C and D only

43. Consider the following Python statement:
temp = [1, 2, 3, 4, 5, 6] [2::2]
Which of the followings is the value of the variable temp after executing the above statement?
(1) 2, 4, 6 (2) 3, 5 (3) [2, 3] (4) [3, 5] (5) [2, 4, 6]

44. Consider the following statements:
A - a = b = 2 + 3
B - a, b = 2, 3
C - a, b = (2, 3)
D - a = (2, 3)
Which of the above are valid assignment statements in Python?
(1) A and B only (2) B and C only (3) C and D only
(4) A, B and C only (5) All A, B, C and D

[*See page seven*

45. Consider the following Python expressions:

A - True or False and True
B - 3 > 2 and False
C - {2, 3} == {3, 2}
D - (2, 3) == (3, 2)

Which of the above expressions would result in the Boolean value True?

(1) A and B only (2) A and C only (3) B and C only
(4) B and D only (5) C and D only

46. The content of two files with names "in.csv" and "out.csv" are shown in the figures "Fig. 1" and "Fig. 2" respectively.

```
Ruvan, 20, 50
Ramesh, 0, 5
Raj, 10, 10
```

Fig. 1: in.csv

```
Ruvan 20 50 70
Ramesh 0 5 5
Raj 10 10 20
```

Fig. 2: out.csv

Which of the following Python programs can be used to transform the data in "in.csv" to the content of the file "out.csv"?

(1)
```
f1=open("in.csv","r")
f2=open("out.csv","r")
for line in f1:
  items=line.strip().split(",")
  tot=int(items[1])+int(items[2])
  print(items[0],items[1],items[2],tot,file = f2)
f1.close()
f2.close()
```

(2)
```
f1=open("in.csv","r")
f2=open("out.csv","w")
for line in f1:
  items=line.strip()
  tot=int(items[1])+int(items[2])
  print(items[0],items[1],items[2],tot)
f1.close()
f2.close()
```

(3)
```
f1=open("in.csv","r")
f2=open("out.csv","w")
for line in f1:
  items=line.strip().split(",")
  tot=int(items[1])+int(items[2])
  print(items[0],items[1],items[2],tot,file = f2)
f1.close()
f2.close()
```

(4)
```
f1=open("in.csv","r")
f2=open("out.csv","w")
for line in f1:
  items=line.strip().split(",")
  tot=items[1]+items[2]
  print(items[0],items[1],items[2],tot,file = f2)
f1.close()
f2.close()
```

(5)
```
f1=open("in.csv","r")
f2=open("out.csv","w")
for line in f1:
  items=line.strip().split(",")
  tot=int(items[1])+int(items([2])
  print(items[0],items[1],items[2],tot,file = f1)
f1.close()
f2.close()
```

47. Consider the following statements on using NAND, NOR gates over NOT, AND, OR gates when constructing logic circuits:

A - They make logic circuit design simpler.
B - They help to construct logic circuits that consume less electricity.
C - They make logic circuit construction more economical.

Which of the above statements is/are correct?

(1) A only (2) B only (3) A and B only (4) A and C only (5) B and C only

[*See page eight*

48. Which of the following functions gives the sum of all elements in any list of integers?

(1)
```
def f(x):
    s=x[0]
    for i in range (0,len(x)):
      s=s+i
    return s
```

(2)
```
def f(x):
    s=x[0]
    for i in range (1,len(x)):
      s=s+i
    return s
```

(3)
```
def f(x):
    s=0
    for i in x:
      s=s+i
    return s
```

(4)
```
def f(x):
    s=0
    for i in x:
      s=s+x[i]
    return s
```

(5)
```
def f(x):
    s=0
    i=0
    while i < len(x):
      s=s+x[i]
    return s
```

49. Consider the following system implementation methods:

A - Direct
B - Pilot
C - Parallel

Which of the above method(s) is/are generally used to implement a home security system?

(1) A only (2) B only (3) C only
(4) A and B only (5) A and C only

50. Consider the following clauses:

A - can response to relevant environment changes
B - always acts according to well-defined user instructions
C - performs only pre-defined set of tasks
D - can make decisions under incomplete information

Which of the above can be considered as properties of software agent system?

(1) A and B only (2) A and C only (3) A and D only
(4) B and C only (5) C and D only

❋ ❋ ❋

සියලු ම හිමිකම් ඇවිරිණි / முழுப் பதிப்புரிமையுடையது / All Rights Reserved]

ශ්‍රී ලංකා විභාග දෙපාර්තමේන්තුව
இலங்கைப் பரீடசைத் திணைக்களம்
Department of Examinations, Sri Lanka

අධ්‍යයන පොදු සහතික පත්‍ර (උසස් පෙළ) විභාගය, 2017 අගෝස්තු
கல்விப் பொதுத் தராதரப் பத்திர (உயர் தர)ப் பரீடசை, 2017 ஓகஸ்ற்
General Certificate of Education (Adv. Level) Examination, August 2017

තොරතුරු හා සන්නිවේදන තාක්ෂණය	II
தகவல், தொடர்பாடல் தொழினுட்பவியல்	II
Information & Communication Technology	**II**

20 E II

පැය තුනයි
மூன்று மணித்தியாலம்
Three hours

Index No. : .....

Important:

- *This question paper consists of* **08** *pages.*
- *This question paper comprises of two parts,* **Part A** *and* **Part B.** *The time allotted for* ***both parts*** *is* ***three hours.***
- *Use of calculators is* ***not allowed***

PART A – Structured Essay:
(pages 2-5)

- *Answer* ***all*** *the questions* ***on this paper itself.*** *Write your answers in the space provided for each question. Note that the space provided is sufficient for your answers and that extensive answers are not expected.*

PART B – Essay:
(pages 5-8)

- *This part consists* ***six*** *questions, of which,* ***four*** *are to be answered. Use the papers supplied for this purpose.*
- *At the end of the time allotted for this paper, tie the* ***two parts together*** *so that* **Part A** *is* ***on top*** *of* **Part B** *before handing them over to the Supervisor.*
- *You are permitted to remove* ***only*** **Part B** *of the question paper from the Examination Hall.*

For Examiner's Use Only

For the Second Paper		
Part	**Question No.**	**Marks**
A	1	
	2	
	3	
	4	
B	1	
	2	
	3	
	4	
	5	
	6	
Total		

Final Marks

In numbers	
In words	

Code Number

Marking Examiner 1	
Marking Examiner 2	
Marks checked by :	
Supervised by :	

[See page two

Do not write in this column

Part A – Structured Essay

*Answer **all four** questions on this **paper itself***

1. Fill in the blanks in the following Data Flow Diagram (Figure 1.1) of the sales information system of a company called Bookland, only by using the words in Boldface in the description given below.

Bookland is a book store that specializes in selling rare books, which are usually not available from other sources. As a practice, Bookland maintains just a one copy of any book at a time due to the higher price of rare books.

Typically, a customer makes a **book enquiry** over the phone from the **Sales Assistant** at Bookland. She then goes through **book details** in the **Inventory** file to check whether such a book is in their stock. If the details of the book is found in the Inventory file, the Sales Assistant then refers to the **Hold-on Requests** tray to make sure that the **book status** is 'available' and makes a **reply to the enquiry**. If the book status is 'available' and the **customer** wishes to reserve the book, she then takes customer's **personal details** and places a **hold-on request** against that book in the Hold-on Requests tray making the book no longer available.

When the customer comes to make the payment and collect the book, the **Cashier** at Bookland refers to the Hold-on Requests tray and finds the relevant hold-on request made by the customer. If there is a valid hold-on request, she then accepts the **payment** from the customer, issues a **payment receipt** to the customer and finalizes the sale. The customer is then allowed to take away the book. The Cashier also files the **copy of the payment receipt** in the **Sales** file, uses it at the end of the day to compile a **sales report** and sends it to the **Owner** of the Bookland. After every sale, the Cashier updates the book details in the Inventory file and keeps the stock up to date. When the Owner supplies books to Bookland, he sends **details of books** to Cashier and the Cashier adds them one by one to the Inventory file.

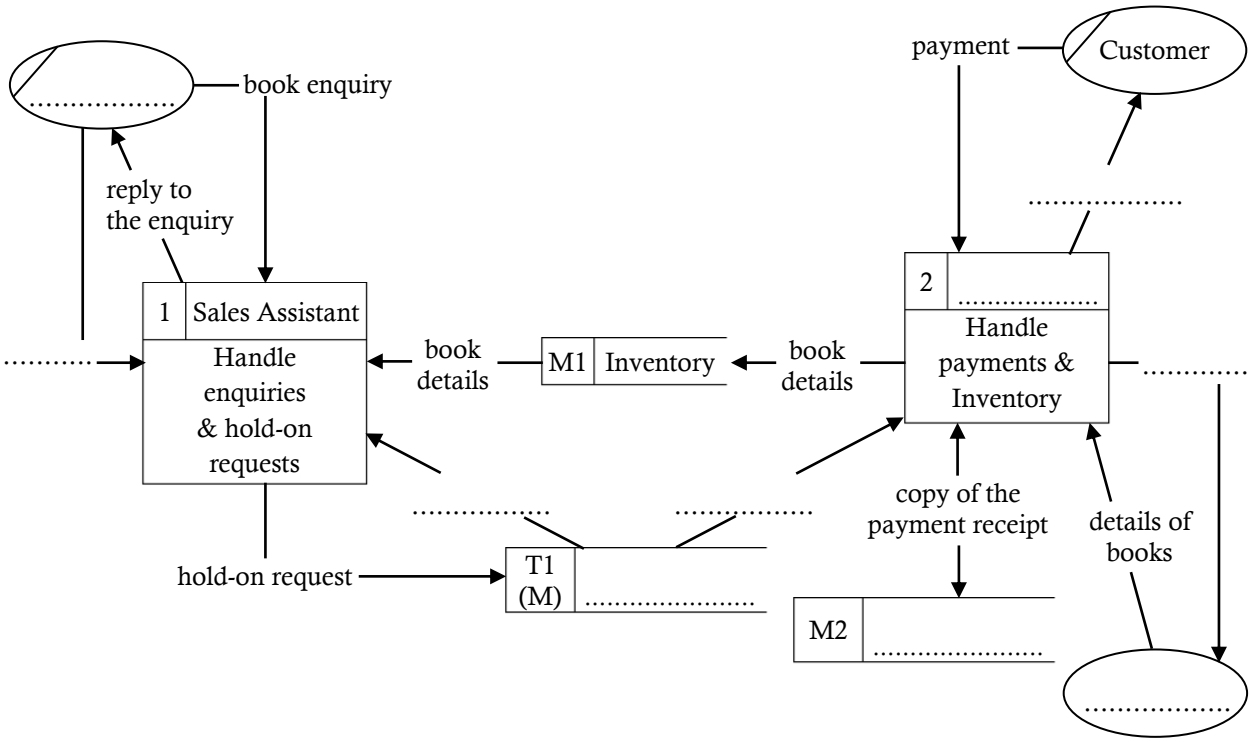

Figure 1.1 : Level 1 Data Flow Diagram of Sales Information System of Bookland

[See page three

Do not write in this column

2. (a) In an operating system, what are the events that change the state of a process in the 'running' state?

.....

.....

.....

.....

.....

.....

(b) Explain the main actions performed by an operating system during context switching.

.....

.....

.....

.....

.....

.....

(c) Explain what will happen during the booting process of a computer.

.....

.....

.....

.....

.....

.....

3. (a) (i) Write **three** key conditions to be satisfied in order to classify a transaction/service between two persons as B2B in e-commerce.

.....

.....

.....

.....

.....

.....

(ii) If the seller in the above transaction is replaced by a software agent, state the key proactive behaviour that software agent shall have.

.....

.....

.....

.....

[*See page four*

Do not write in this column

(b) The following SQL statement has been used to create a table in a database.

```
create table student(
student_no char(5),
name char(30),
address char(100),
primary key (student_no)
)
```

(i) Write a query in SQL to add the following data to the student table.

Student number – 10001
Name – Saman Kumara
Address – 78, Mahara road, Maharagama

.....

.....

.....

.....

.....

.....

(ii) If the address of the student entered in the (i) above should be changed to 13, School Lane, Jaffna, write a query in SQL to update the relevant record in the student table.

.....

.....

.....

.....

4. (a) (i) The Figure 4.1 represents an open system. Using the basic components: input, process, output and system boundary as given in the figure, draw a diagram to represent a closed system.

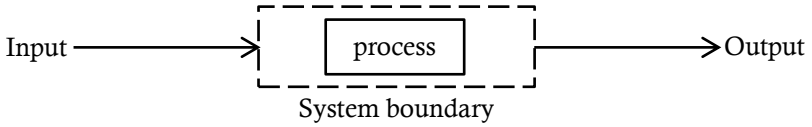

Figure 4.1 : An open system

[See page five

Do not write in this column

(ii) Explain the reason for drawing the diagram which you drew for (i) above.

.....

.....

.....

.....

(b) A person can own one or more mobile phones. One mobile phone belongs to a single person only. Assume that a mobile phone can be uniquely identified by its telephone number. National Identity Card number (NIC No) is used to identify a person uniquely.
Above statements are represented by the ER diagram in Figure 4.2.

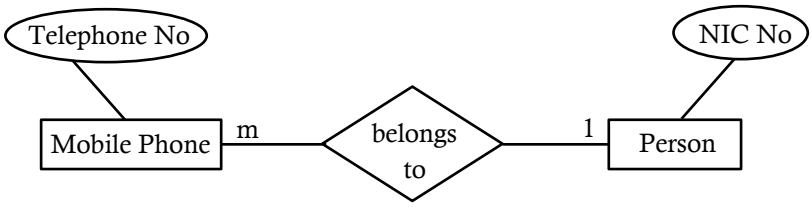

Figure 4.2 : ER diagram

Convert the above ER diagram into 3rd Normal Form relations to be implemented in relational database.

* *

[See page six

සියලු ම හිමිකම් ඇවිරිණි / முழுப் பதிப்புரிமையுடையது / All Rights Reserved]

ශ්‍රී ලංකා විභාග දෙපාර්තමේන්තුව
இலங்கைப் பரீடசைத் திணைக்களம்
Department of Examinations, Sri Lanka

අධ්‍යයන පොදු සහතික පත්‍ර (උසස් පෙළ) විභාගය, 2017 අගෝස්තු
கல்விப் பொதுத் தராதரப் பத்திர (உயர் தர)ப் பரீடசை, 2017 ஓகஸ்ற்
General Certificate of Education (Adv. Level) Examination, August 2017

තොරතුරු හා සන්නිවේදන තාක්ෂණය II
தகவல், தொடர்பாடல் தொழினுட்பவியல் II
Information & Communication Technology II

20 E II

Part B

✱ *Answer any **four** questions only.*

1. A switch (A), a temperature sensor (B) and a timer (C) of an air-conditioner determine turned on and turned off states of the air-conditioner. Turned on and turned off states of the air-conditioner as well as the 'ON' and 'OFF' states of the switch, temperature sensor and the timer are represented by the logical values 1 and 0, respectively.

The air-conditioner can be turned on or off manually by setting the switch to its 'ON' or 'OFF' states, respectively.

The temperature sensor detects the temperature in the room. The temperature sensor sets its state as 'ON' or 'OFF' when the detected temperature is respectively higher or lower than a pre-defined temperature value. The air-conditioner is automatically turned on or off when the detected temperature is respectively higher or lower than the pre-defined temperature value.

The timer sets its state as 'OFF' until it reaches a preset time value and sets the state as 'ON' once it reached. The air-conditioner is automatically turned off when the timer reaches the preset time value.

(a) Construct a logic circuit using only NOR gates to control the air-conditioner. Clearly show truth table, Boolean expression and Boolean algebraic rules used for simplification. Assume that the electricity is always supplied to the air-conditioner.

(b) The user of the air-conditioner says that the switch is not required for the operation of the air-conditioner. Do you agree with this statement? Justify your answer.

2. A "Demilitarized Zone (DMZ)" is a subnet that contains and exposes an organization's external-facing services such as web servers (public IP addresses) to the Internet while hiding away the rest of the network behind a firewall (using local IP addresses).

A network with a DMZ belonging to an organization has been assigned the public IP address range 123.45.67.0 with subnet mask 255.255.255.224. The DMZ contains the web server and the mail server. It has 4 additional subnets for internal use having the private IP address range 10.0.0.0 with the subnet mask 255.0.0.0. Computers in each subnet can access resources in all other subnets. The organization decided to connect the 4 subnets to the Internet through a proxy server. There is also an application server for its internal clients.

Identify the devices required to establish this network and draw a network diagram to show the logical arrangement of the organization's computer network. Show all the elements of the network with appropriate IP addresses. Clearly show all calculations stating assumptions you made.

Further, it is also required to explain the changes done to an IP packet released by a computer to a subnet by the proxy server when it travels to the Internet.

3. A state health authority decided to conduct an awareness program as an online service through Internet to reduce dengue infection by transmission of the virus through the mosquitoes. This service provides information on how to adopt dengue control approaches, such as cleaning the environment, destroying non-essential containers that provide larva habitats etc., in order to minimize mosquitoes' propagation.

(a) To which e-commerce type does this service belong?

(b) If the service is extended by allowing organizations to register their services targeting minimizing the spread, what is the e-commerce type of this extended service? Justify your answer.

(c) Assume that a registered organization provides a service for itself to submit the details of the identified dengue breeding places to the state authority online. Why is this service **not** rightly considered as B2B? What is the correct e-commerce type of this service?

[See page seven

(d) An expert system is proposed to develop policies to fine the owners of the locations where dengue mosquitoes have been detected. Accordingly, experts in Attorney General's Department and epidemiology units are consulted. State key contributions that are expected from each expert to develop the Knowledge base of the expert system. (Hint: The contribution of one expert should be an input to the decision making process of the other expert).

4. The consumption of electricity at houses is charged based on the number of units consumed. The first 64 units are charged at Rs.5.00 per unit, and the rest at Rs.10.00 per unit.

(a) Draw a flowchart to represent an algorithm that can be used to compute the total amount to be charged from a householder when the household number and present and the previous readings of the electricity meter are given.

(b) Encode the algorithm given in the (a) above in Python programming language. State all valid assumptions, if any.

(c) Develop a function in Python to write household number, meter readings and the total amount to be charged at the end of an existing text file named "deb.txt".

5. The candidates who have been selected for university entrance should register for the given academic year with the university given to them. Candidates who do not register before the 'Last date' announced by each university will lose their university entrance. Once a candidate registers with the given university, the candidate becomes a registered student of that university. Registered students can apply for financial support, such as Mahapola scholarships and Bursary, separately. These financial supports could be either full or partial. All registered students will receive a laptop. However, its ownership cannot be transferred to another student. The user requirements of the above system are listed below. A user shall be able to obtain:

(a) a list of students registered for a given academic year with a given university.

(b) information (such as model, serial number and warranty period) about the laptops given to each student.

(c) list of students who applied for financial support.

Draw an Entity Relationship (ER) diagram required to design a database to represent the above system description and to satisfy the user requirements. State all your assumptions clearly.

6. Environmental Institute of Colombo intends to develop a website to provide information on an art competition for students. A web page from this website and another web page with the entry form to register for the competition are shown in the Figure 6.1 and Figure 6.2 respectively.

Student Art Competition

Theme: Litter on the environment

PRIZES

- 1st place Rs. 10,000/=
- 2nd place Rs. 7,500/=
- 3rd place Rs. 5,000/=

ENTRY FORM

Please fill and submit this online entry form to enter the competition

Figure 6.1 : A web page of the website

(a) Using appropriate HTML tags, create an HTML file required to render the web page as shown in Figure 6.1. Your code should satisfy the following requirements.

It is required to format the text of the list in 'Calibri' font, 14 points high, in red color. The list should be bulleted with squares. Format the list by using internal or external style sheets only.

Further, when a user clicks on the hypertext 'online entry form' on the web page, the entry form given in Figure 6.2 should be rendered on a new tab/page. Assume that the name of the HTML file of the web page with the entry form is 'form.html'.

[*See page eight*

Art Competition Online Entry Form 2017

Theme: Litter on the environment

Name:

Gender: ○ Male ○ Female

Grade Category Grade 1 -2

Art media:

- ☐ Water Colours
- ☐ Colour Pencils
- ☐ Crayon
- ☐ Chalk

Clear your Entries

Submit

Figure 6.2 : Entry form

(b) Using appropriate HTML tags, create an HTML file to render the entry form given in Figure 6.2. The options for 'Grade Category' are given in the Figure 6.3. Your code should satisfy the following requirements. When the 'Clear your Entries' button is clicked, all the entries of the form should be cleared. Similarly, when the 'Submit' button is clicked, the form should be submitted to the server.

Grade Category Grade 1 -2
Grade 1 -2
Grade 3 -6
Grade 7 -10
Grade 11 -13

Figure 6.3 : Options for Grade Category

❋ ❋ ❋